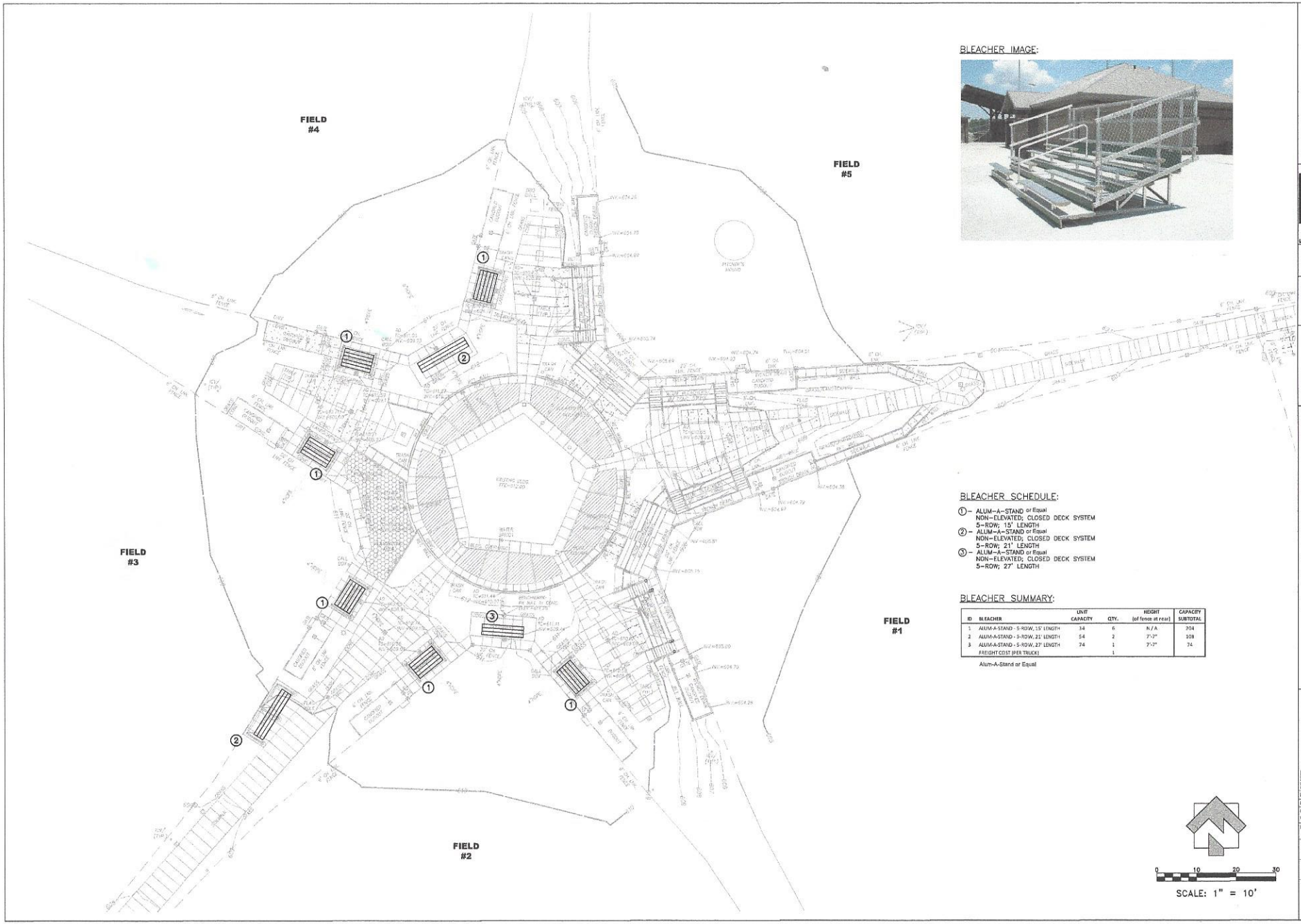

BLEACHER IMAGE:

BLEACHER SCHEDULE:

1 – ALUM–A–STAND or Equal
NON–ELEVATED; CLOSED DECK SYSTEM
5–ROW; 15' LENGTH

2 – ALUM–A–STAND or Equal
NON–ELEVATED; CLOSED DECK SYSTEM
5–ROW; 21' LENGTH

3 – ALUM–A–STAND or Equal
NON–ELEVATED; CLOSED DECK SYSTEM
5–ROW; 27' LENGTH

BLEACHER SUMMARY:

ID	BLEACHER	UNIT CAPACITY	QTY.	HEIGHT (of fence at rear)	CAPACITY SUBTOTAL
1	ALUM-A-STAND - 5-ROW, 15' LENGTH	34	6	N / A	204
2	ALUM-A-STAND - 5-ROW, 21' LENGTH	54	2	7'-7"	108
3	ALUM-A-STAND - 5-ROW, 27' LENGTH	74	1	7'-7"	74
	FREIGHT COST (PER TRUCK)		1		

Alum-A-Stand or Equal

SEC, Inc.
SITE ENGINEERING CONSULTANTS
ENGINEERING • SURVEYING • LAND PLANNING
650 MIDDLE TENNESSEE BOULEVARD
MURFREESBORO, TENNESSEE 37129
NO PORTION OF THIS DRAWING MAY BE REPRODUCED WITHOUT THE EXPRESSED WRITTEN CONSENT OF S.E.C. INC.

LOSE & ASSOCIATES, INC.
1314 5th Avenue North, Suite 200
Nashville, TN 37208
(615) 242-0040
220 W. Crogan St. Suite 100
Lawrenceville, GA 30046
(770) 338-0037

McKnight Park
StarPlex Complex Renovations
Four-Field Complex Renovations
Murfreesboro Parks & Recreation Department
Murfreesboro, Tennessee

REVISED:
DRAWN: BB
DATE: 02/13/15
CHECKED: CC
FILE NAME:
SCALE: 1" = 10'
JOB NO. 13056

BLEACHER PLAN

SHEET: C1.00

CROSSBRACE

A. CROSSBRACE = 77 1/8" 15968

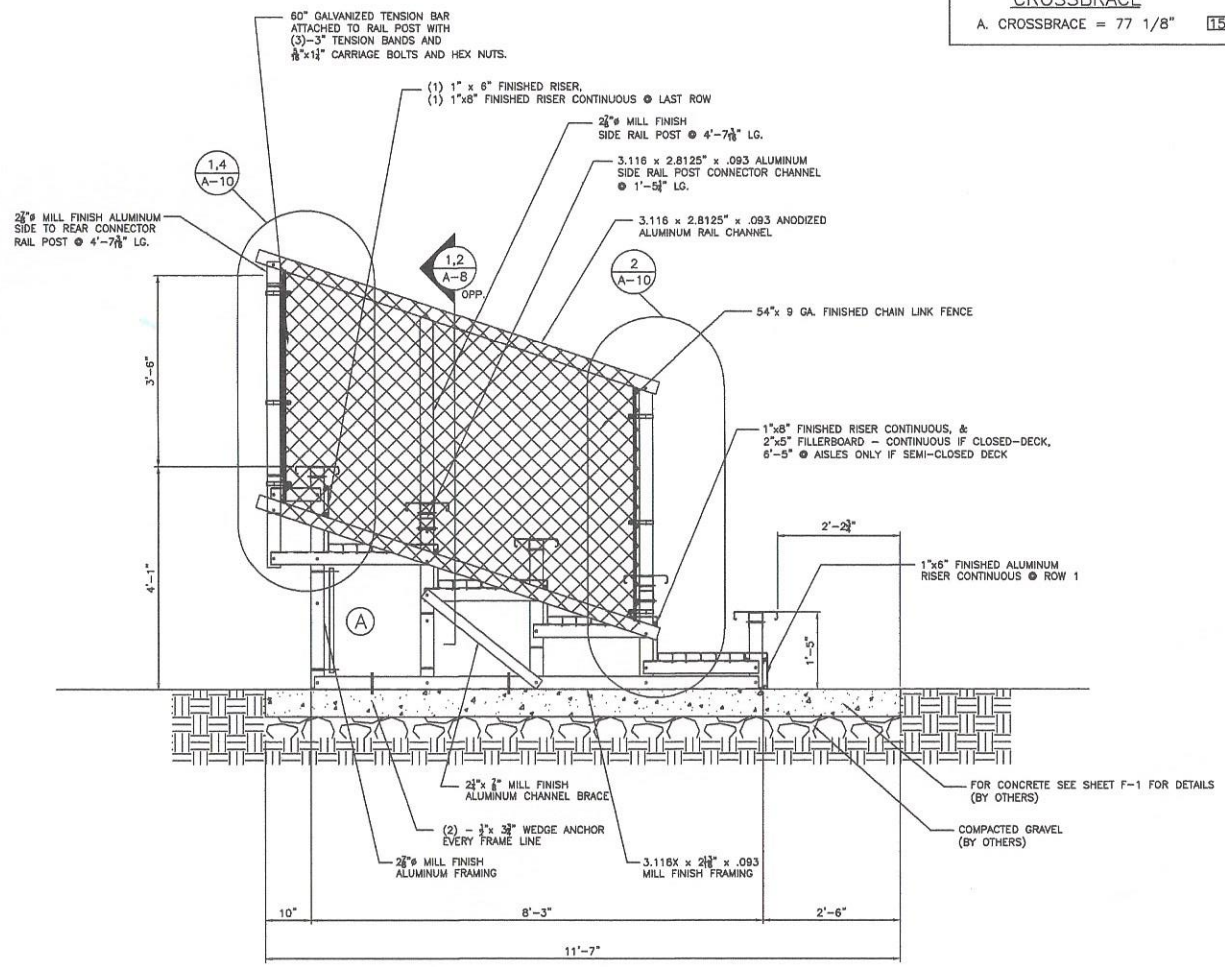

1 A-2 END ELEVATION
SCALE:

PROJECT NAME:
5 ROW NE
END ELEVATION

DANT CLAYTON CORPORATION
P.O. Box 740008
1500 Bernheim Lane
Louisville, KY 40201-7408
Telephone (502) 634-3626
WWW.DANTCLAYTON.COM

REVISIONS

REV. NO.	DATE	DESCRIPTION	INITIALS	ECO NUMBER
A	12/26/02	Orig'l length of rear rail post to 62 1/2"	clr	0195
B	2/1/02	Correct Detail References	BN	1685
C	11/26/02	Update Drawing	GDJ	2223
D	1/1/13	REMOVED MIDDLE RAIL	MLS	7020
E				

SHEET NUMBER
A-2

PART NUMBER
0000184

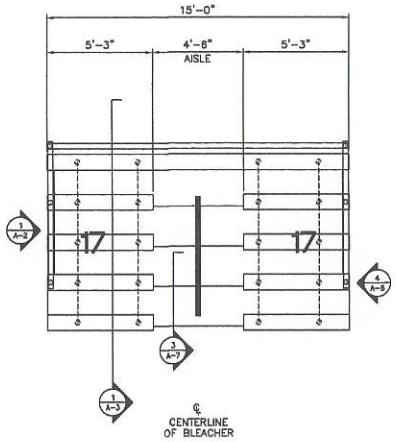

SEATING PLAN

3/8"=1'-0"

ROWS 5	ELEVATION 0"	
RISE 8	RUN 24	
DECK SYSTEM –	CLOSED	
DECK FINISH –	MILL	
BENCH SEATING CAPACITY		34
CHAIR SEATING CAPACITY		0
WHEELCHAIR SEATING CAPACITY		0
COMPANION SEATING CAPACITY		0
TOTAL SEATING CAPACITY		34

PROJECT NAME:

WARREN COUNTY PARKS
BOWLING GREEN, KY
27411

DANT CLAYTON
CORPORATION
1500 Bernheim Lane
Louisville, KY 40210
Telephone (502) 634-3626
WWW.DANTCLAYTON.COM

REVISIONS

REV. NO.	DATE	DESCRIPTION	INITIALS	ECO NUMBER
A				
B				
C				
D				
E				

SHEET NUMBER

A-1

PART NUMBER

0204024

0204024

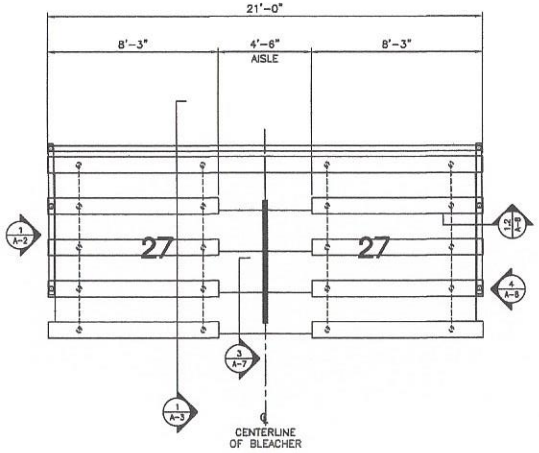

SEATING PLAN

3/8"=1'-0"

5 ROWS, 0" ELEVATION
8 /24 RISE/RUN
DECK SYSTEM – CLOSED/SEMI-CLOSED DECK

BENCH SEATING CAPACITY	54
CHAIR SEATING CAPACITY	0
WHEELCHAIR SEATING CAPACITY	0
COMPANION SEATING CAPACITY	0
TOTAL SEATING CAPACITY	54

PROJECT NAME:
STANDARD SPP
5RNE21CD-SC

DANT CLAYTON CORPORATION
1900 Bernheim Lane
Louisville, KY 40210
Telephone (502) 634-3626
WWW.DANTCLAYTON.COM

REVISIONS

REV. NO.	DATE	DESCRIPTION	INITIALS	ECO NUMBER
A				
B				
C				
D				
E				

SHEET NUMBER
A-1

PART NUMBER
0155856

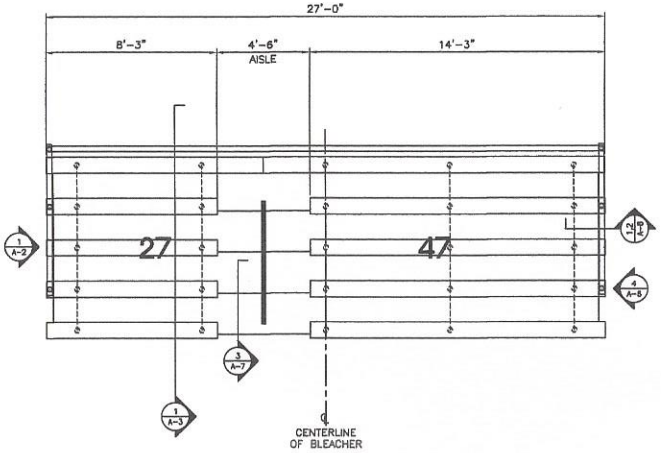

SEATING PLAN

3/8"=1'-0"

5 ROWS, 0" ELEVATION
8 /24 RISE/RUN
DECK SYSTEM – CLOSED/SEMI-CLOSED DECK

BENCH SEATING CAPACITY	74
CHAIR SEATING CAPACITY	0
WHEELCHAIR SEATING CAPACITY	0
COMPANION SEATING CAPACITY	0
TOTAL SEATING CAPACITY	74

PROJECT NAME:
STANDARD SPP
5RNE27CD-SC

DANT CLAYTON CORPORATION
1500 Bernheim Lane
Louisville, KY 40210
Telephone (502) 634-3626
WWW.DANTCLAYTON.COM

REVISIONS

REV. NO.	DATE	DESCRIPTION	INITIALS	CCO NUMBER
A				
B				
C				
D				
E				

Werkenberg	ALB	KIT	Core Blend Module	
AS NOTED	6	0	27'-0"	6 / 84

SHEET NUMBER
A-1

PART NUMBER
0155857